Cubicle / Freestall Installation Manual (English)

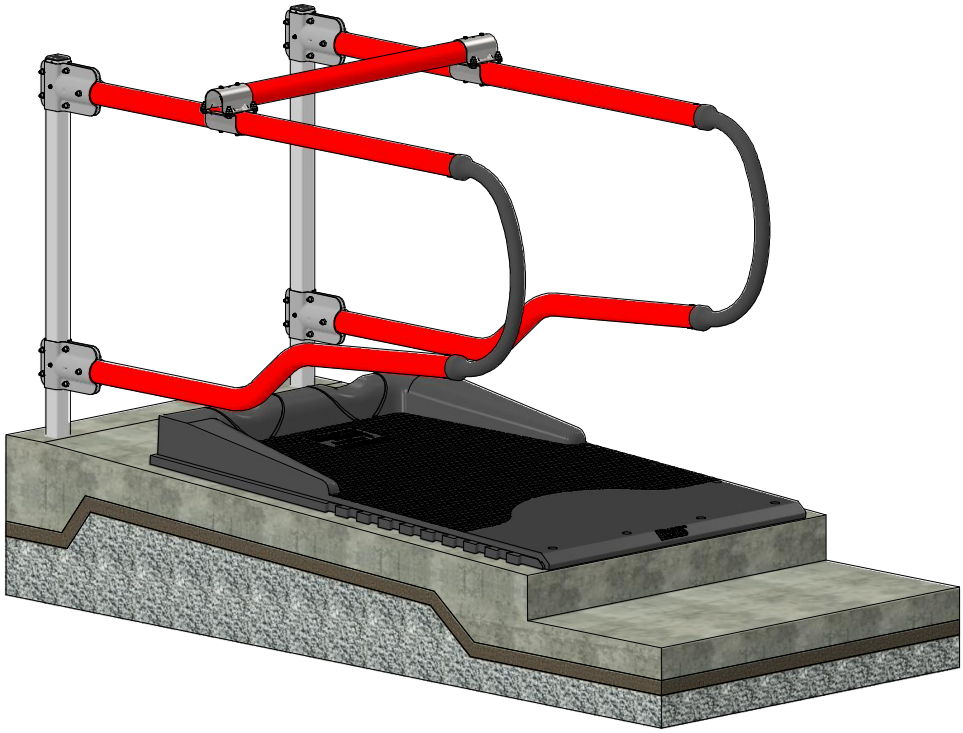

Calm

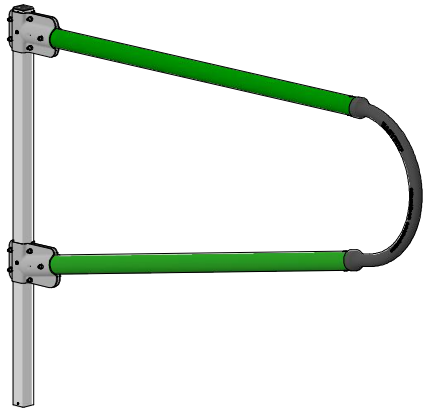

Dream

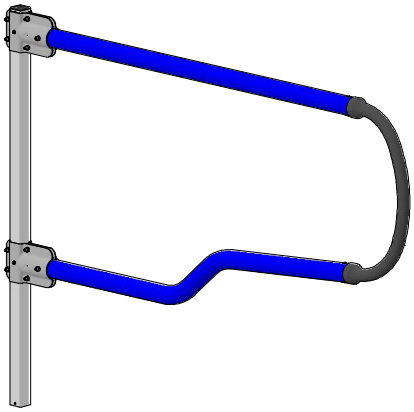

This manual is applicable for Calm & Dream cubicles.

Both styles are available in Green, Blue and Red colours.

Components

Item ID	Part Name	Alternatives
1	Post	Set in Concrete / Bolted Base Plate
2	Clamp	Straight/Angled & Single/Double
3	Top Pipe	1.8m / 2m
4	Bottom Pipe	Calm / Dream
5	Coupling	
6	Neckrail	
7	Loop	
8	Direct End Wall Bracket	
9	Extended End Wall Bracket	
10	Cow Guide	*Optional
11	Neckrail Joiner	

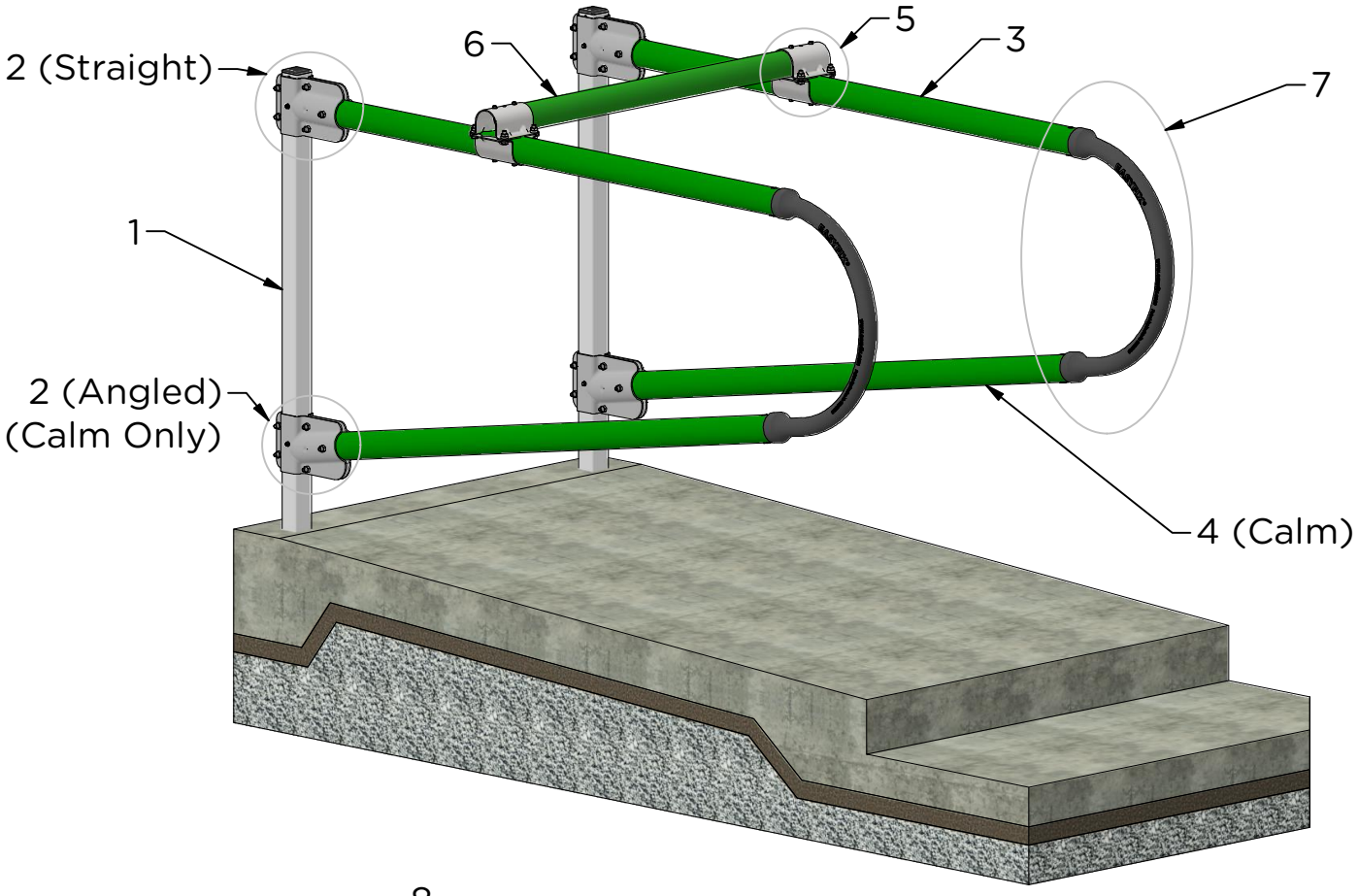

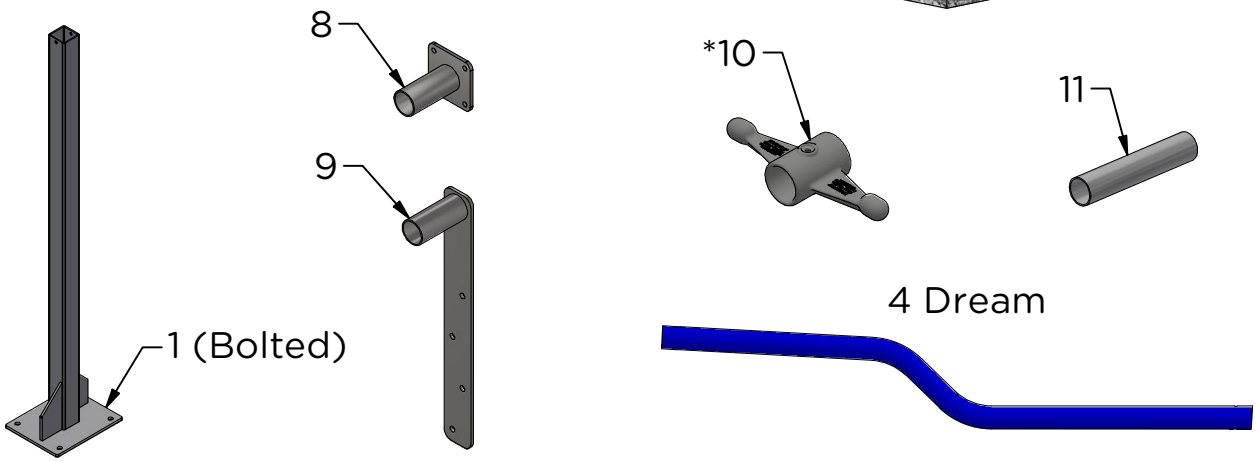

Fixings

19mm



A) M12 Through Bolt

17mm

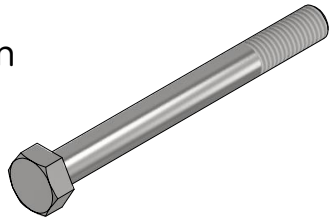

B) M10x100mm Bolt

17mm



C) M10 Lock Nut

6mm

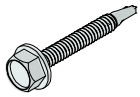

D) Tec Screw

TX25



E) M8x75mm Screw



F) M8 Rivet Nut

19mm

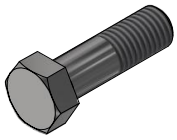

G) M12x40mm Bolt

17mm

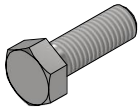

H) M10x30mm Bolt

17mm

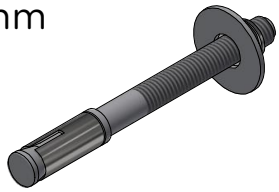

I) M10 Through Bolt

TX25

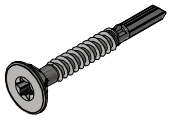

J) Tec Screw

TX30



K) M8x100mm Screw



L) 20mm Washer

19mm

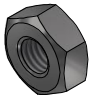

M) M12 Lock Nut



N) 25mm Washer

Step 1 - Post Setup

Refer to Appendix A at the back of this manual for full positioning guidelines for the Single and Double post cubicles.
EASYFIX™ recommends a cubicle bed slope of 3-4%.

Step 1.1 - Set in Concrete

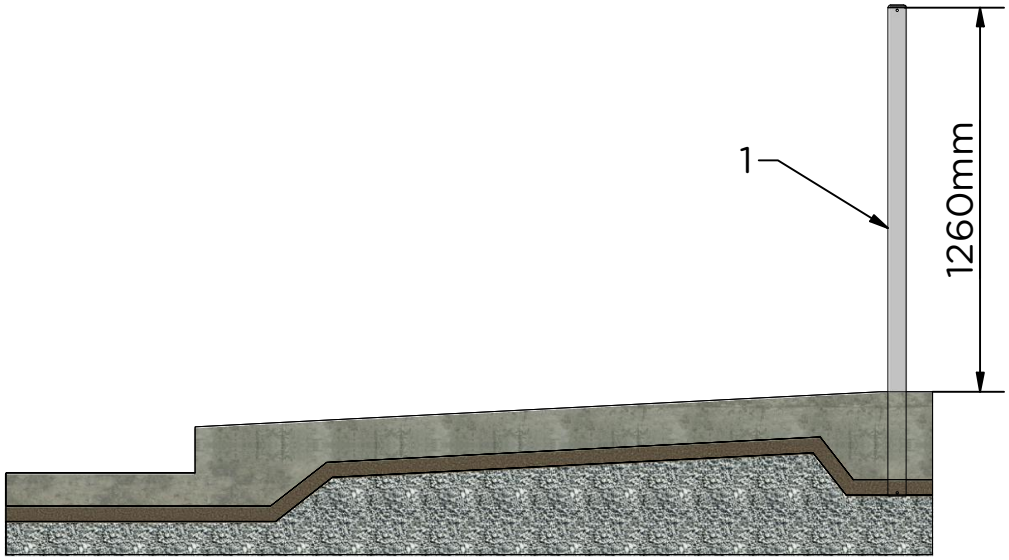

Step 1.2 - Bolt to Floor

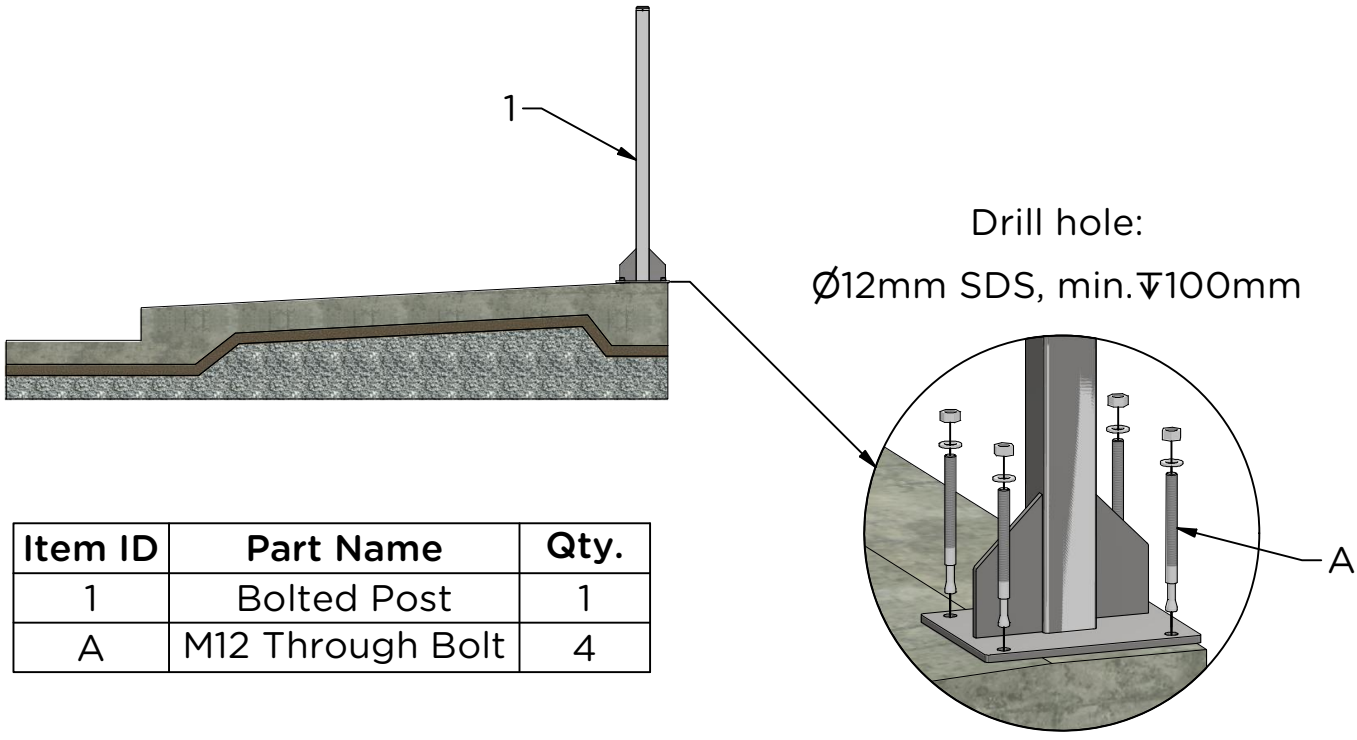

Item ID	Part Name	Qty.
1	Bolted Post	1
A	M12 Through Bolt	4

Step 2 - Assemble the Clamps

Item ID	Part Name	Qty.
2	Clamp (matching halves)	1
G	M12x40mm Bolt	4
M	M12 Locknut	4

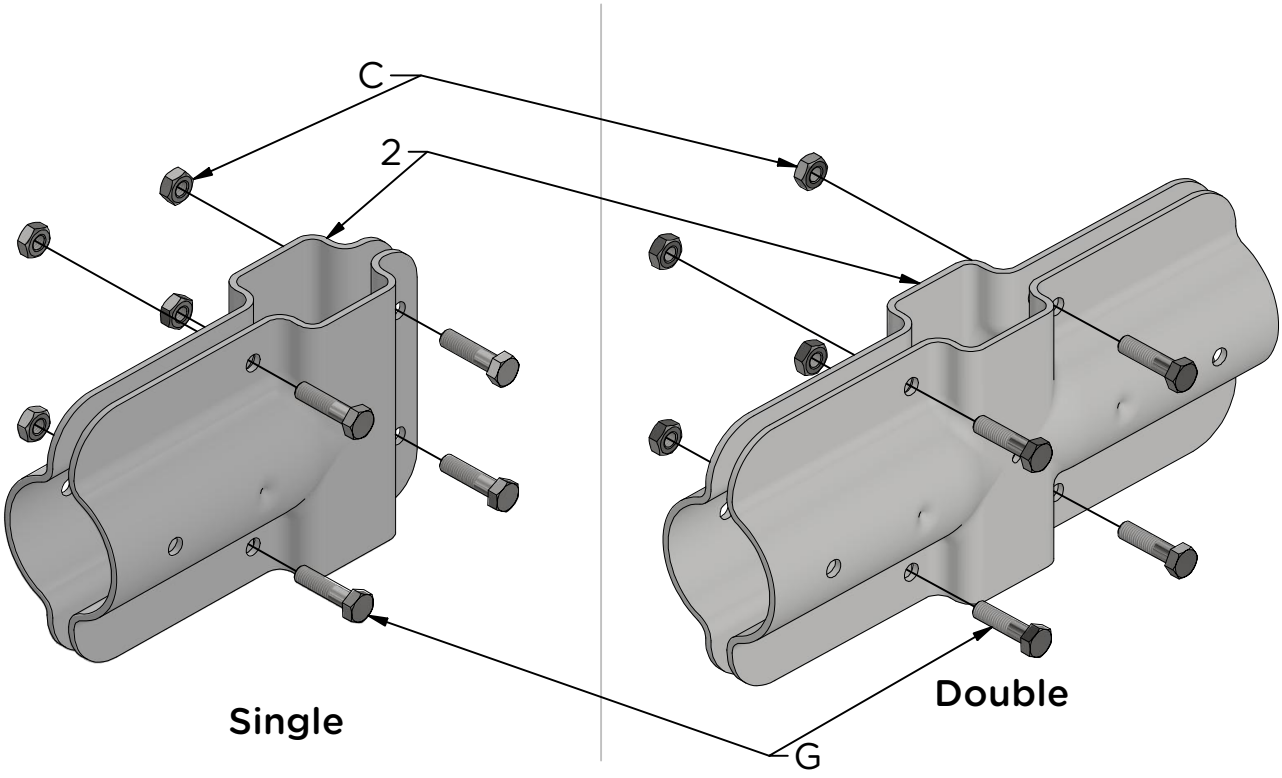

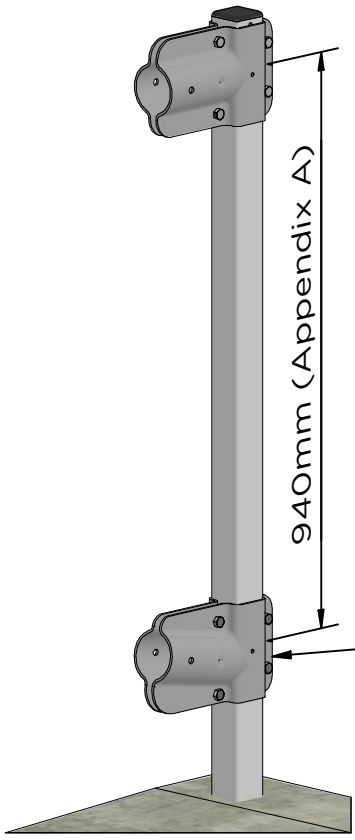

- Do not overtighten bolts, as further adjustment may be required.
- See Appendix B for clamp configuration.

Step 3 - Attaching the Pipes

Item ID	Part Name	Qty.
3	Top Pipe	1
4	Bottom Pipe	1
B	M10x100mm Bolt	2
C	M10 Locknut	2

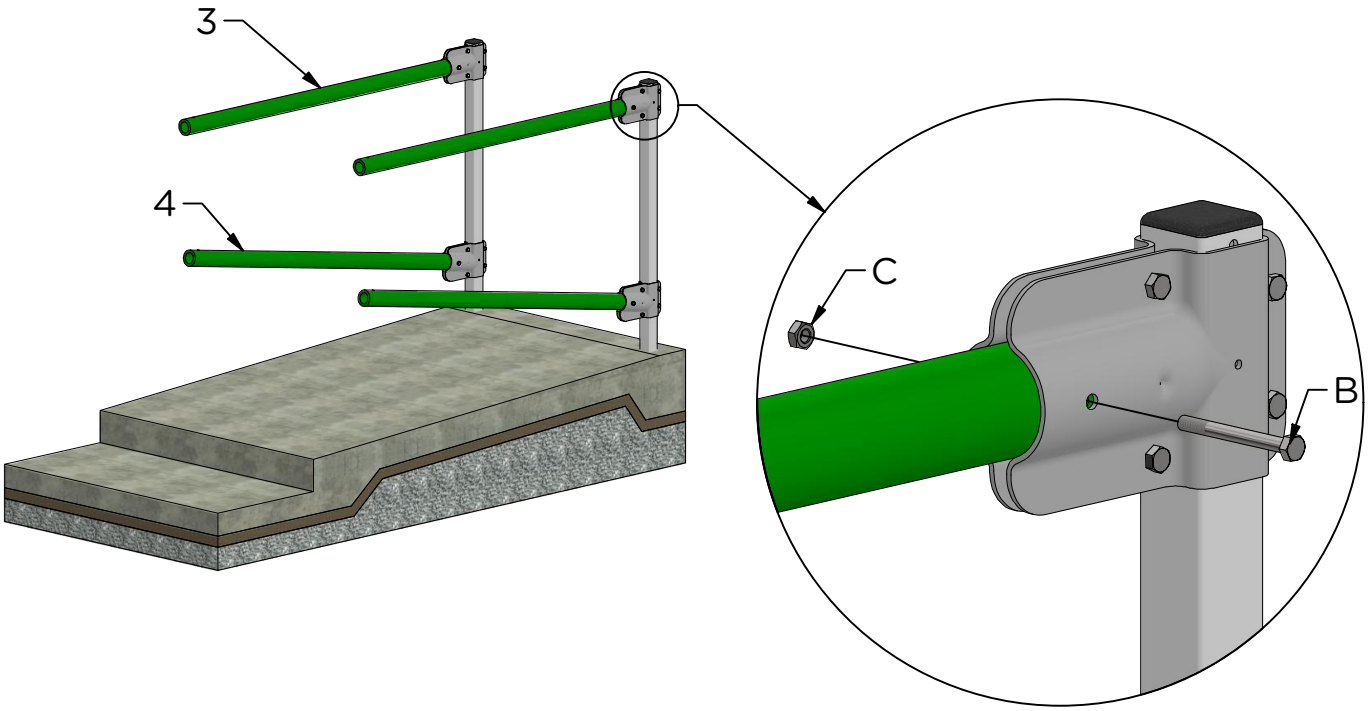

Step 4 - Attaching the Loops

Item ID	Part Name	Qty.
7	Loop	1

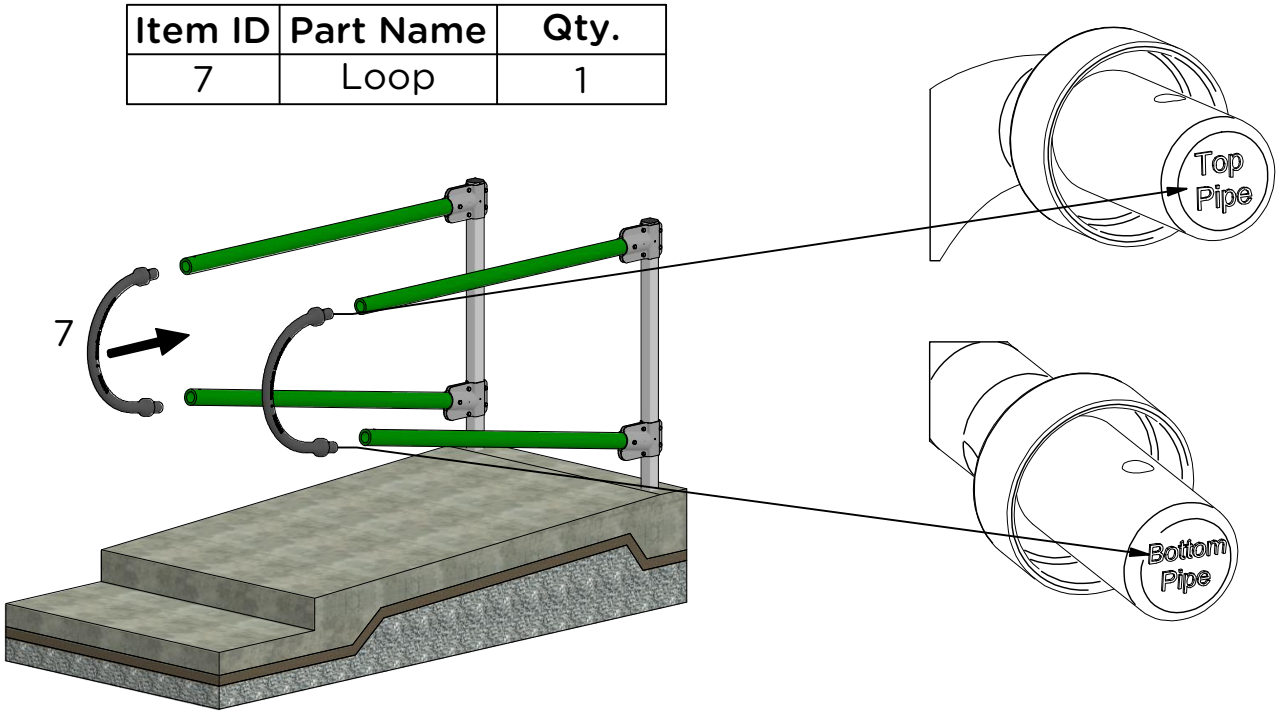

Step 5 - Fitting the Couplings

Item ID	Part Name	Qty.
5	Coupling	1
H	M10x30 Bolt	4
C	M10 Lock Nut	4
L	20mm Washer	4

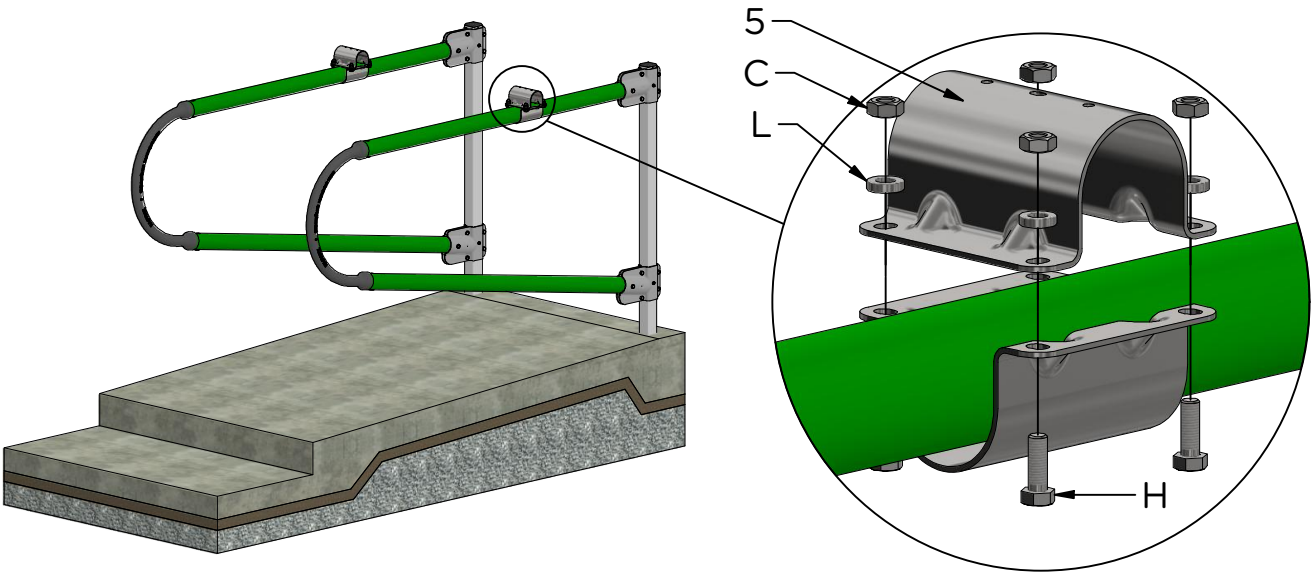

Step 6 - Placing the Neckrail

Item ID	Part Name	Qty.
6	Neckrail	1

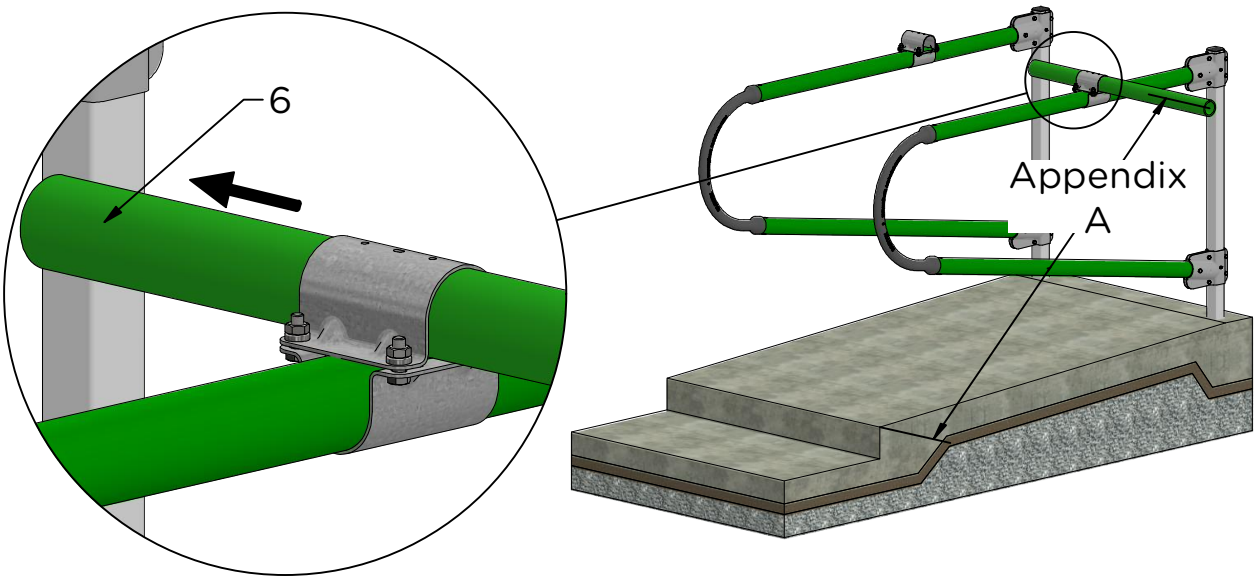

Step 7 - Fixing the Cubicle

A - Loop to Pipe (Top & Bottom)

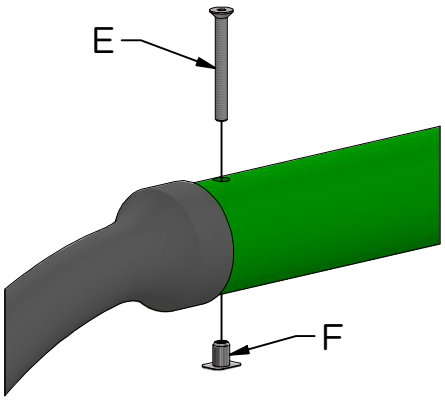

B - Coupling Tec Screw

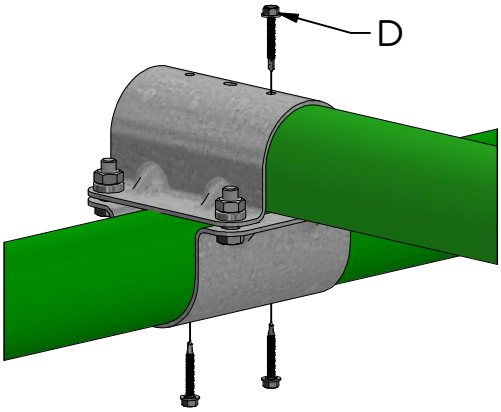

C - Clamp Tec Screw

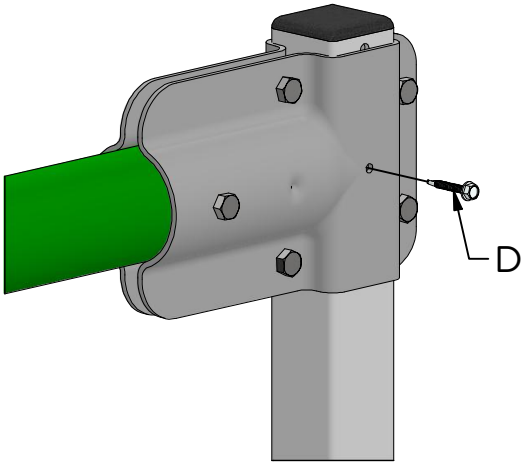

D - Cow Guide

*optional

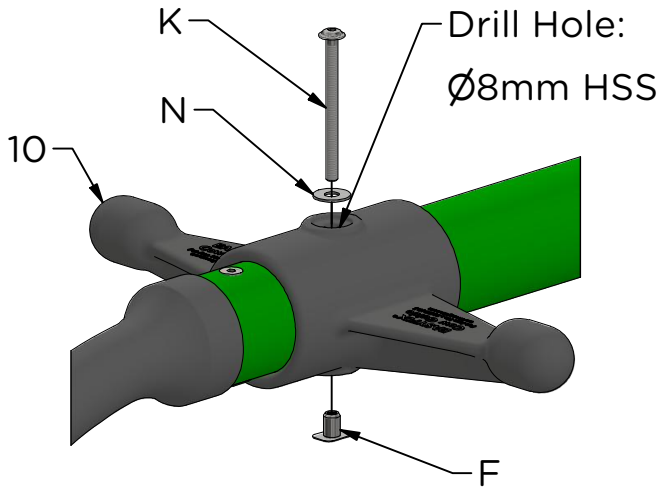

E - Neckrail Joiner

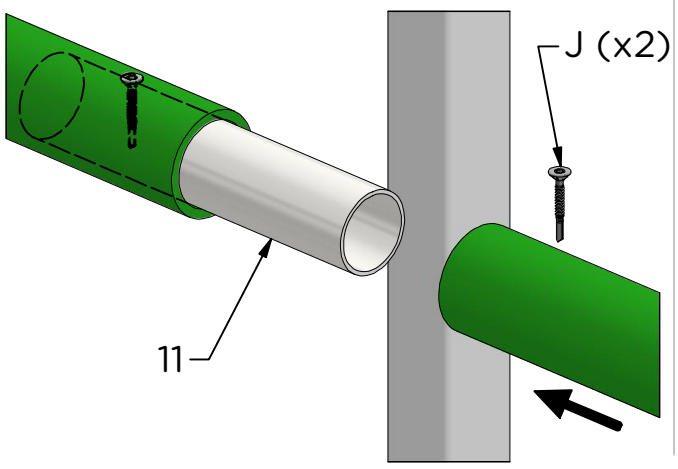

Note: All bolts/fixings should be rechecked & retightened where necessary after the first 3 months of use and once yearly thereafter.

End Wall Bracket Installation

Direct End Wall Bracket

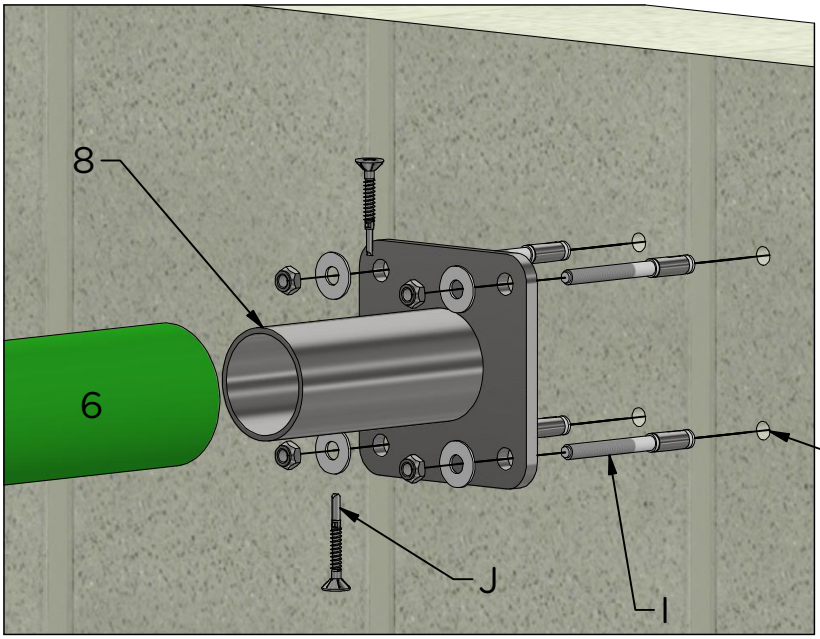

Item ID	Part Name	Qty.
6	Neckrail	1
8	Direct Steel End Wall Bracket	1
I	M10 Through Bolt	4
J	Tec Screw	2

Extended Wall Bracket

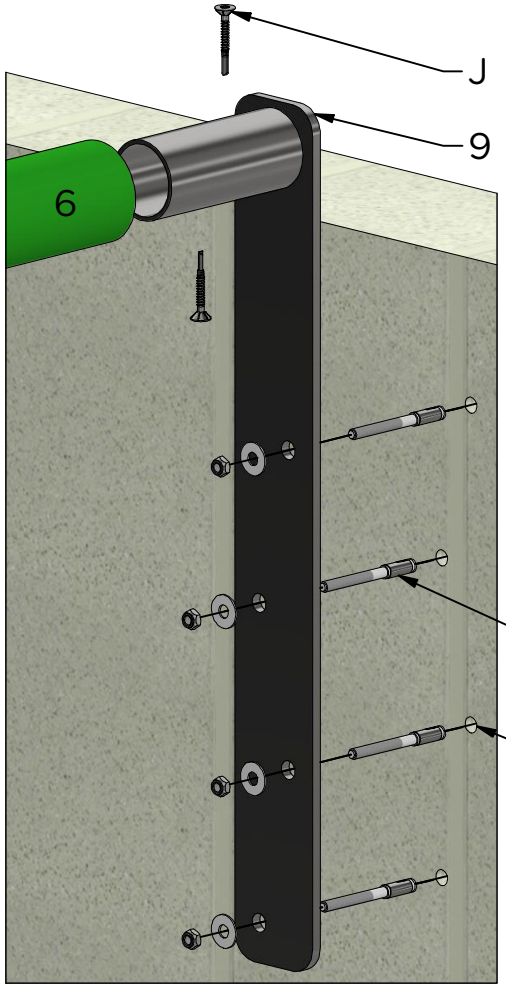

Item ID	Part Name	Qty.
6	Neckrail	1
9	Extended End Wall Bracket	1
I	M10 Through Bolt	4
J	Tec Screw	2

Appendix A

Single Cubicle

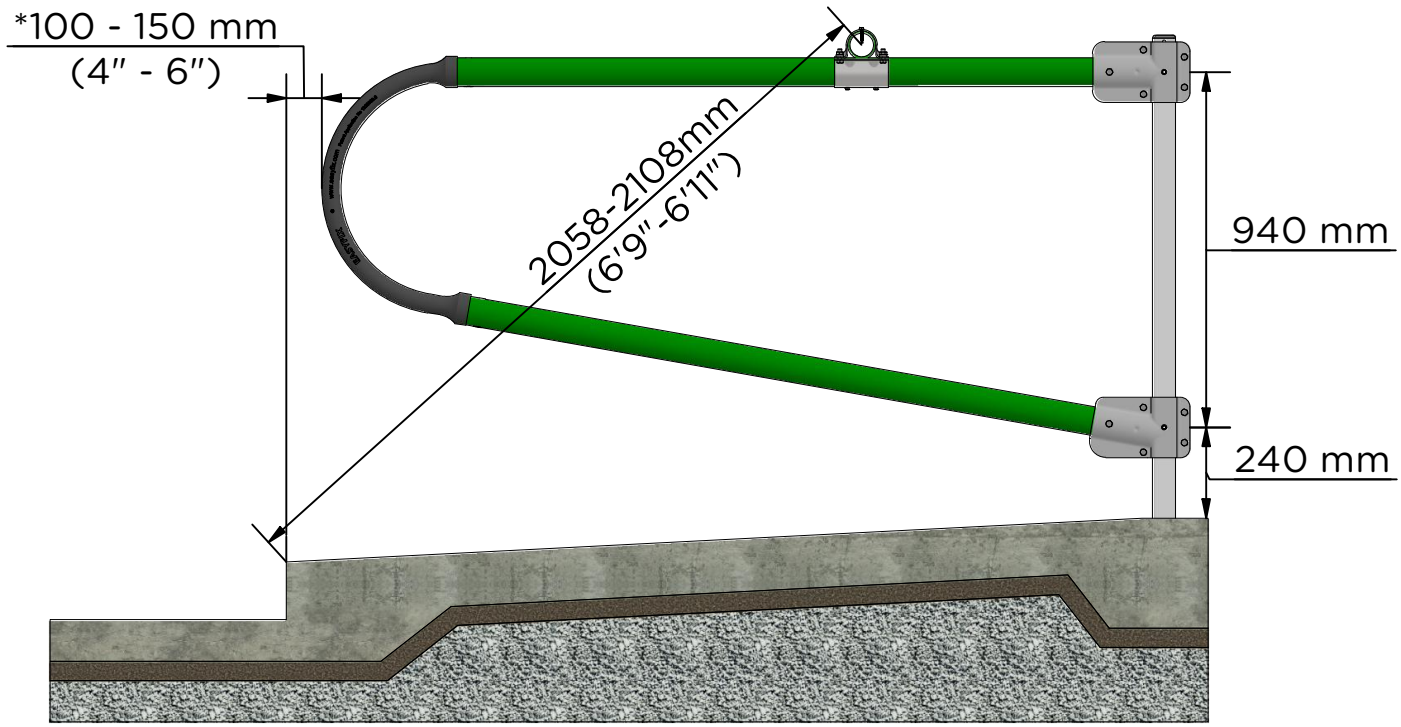

Double Cubicle

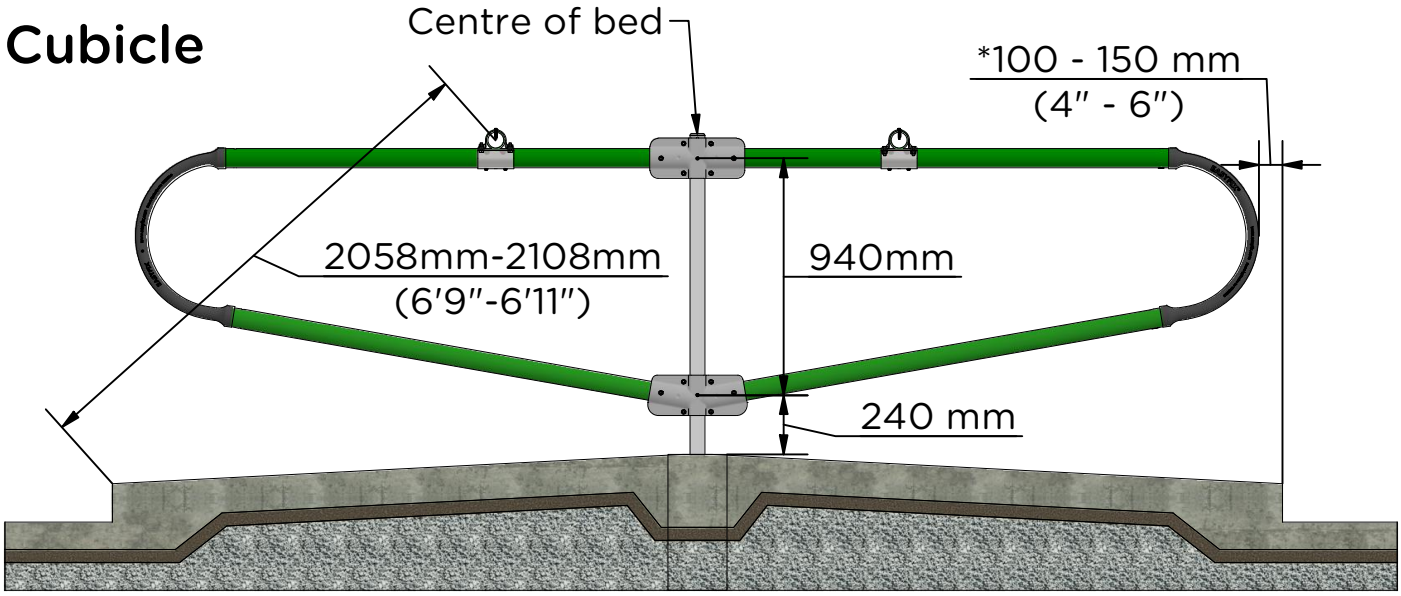

*If the loop offset is less than 100 mm to the heelstone, the pipes can be cut to fit.

Appendix B

Dream

Top Pipe



Top Clamp

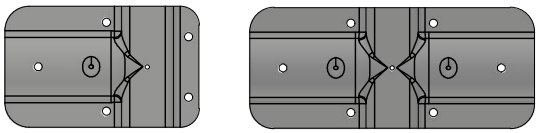

Bottom Pipe

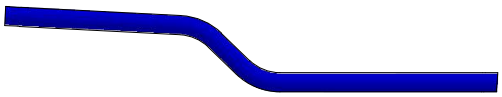

Bottom Clamp

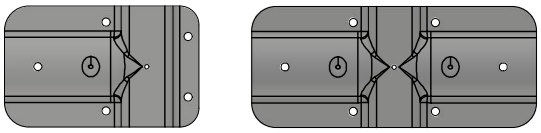

Calm

Top Pipe



Top Clamp

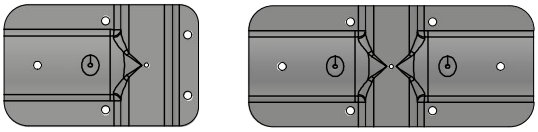

Bottom Pipe



Bottom Clamp

